MODEL : FT50

RATIO : 10.15.20.25.30.40.50 (雙段 2-Stage)

FT-RS

搭配行星減速機 - 單出力軸心

Fitted with Planetary Reducer

- Single Output Shaft

unit:mm

Model / Code	50
A1	8、11
A2	30、40、50
A3	M3、M4、M5
A4	46、60、63
A5	46、55
A6	M4 x P0.7
A7	26、30.5
Weight ±3% (kg)	1.02

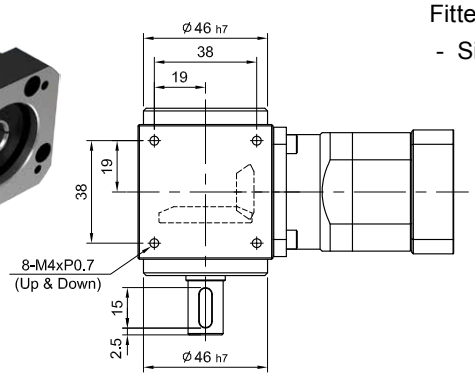

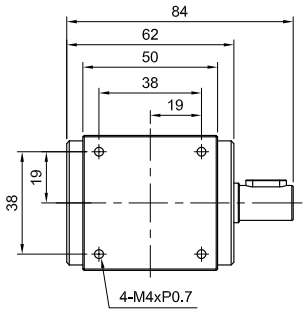

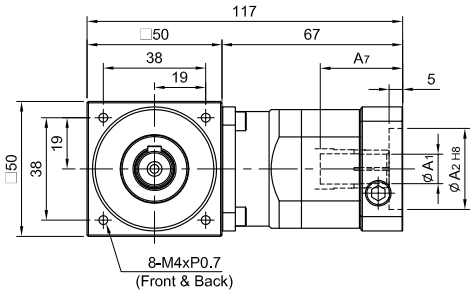

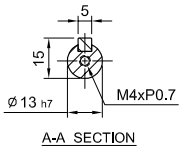

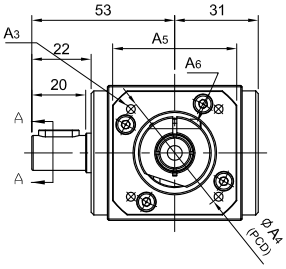

FT-RV

搭配行星減速機 - 雙出力軸心

Fitted with Planetary Reducer

- Double Output Shaft

unit:mm
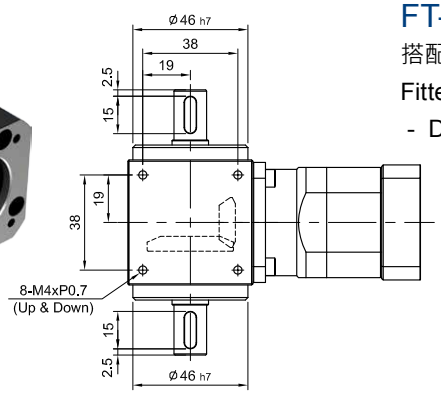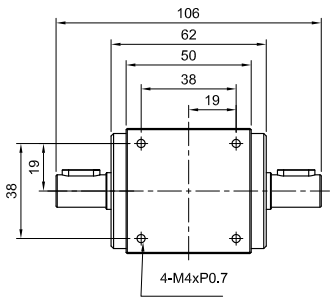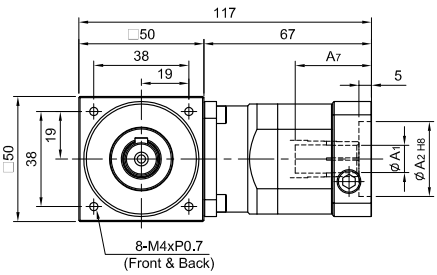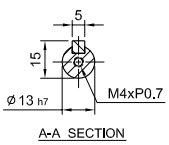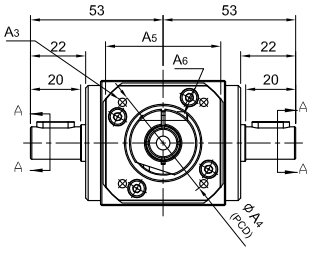
Model / Code	50
A1	8、11
A2	30、40、50
A3	M3、M4、M5
A4	46、60、63
A5	46、55
A6	M4 x P0.7
A7	26、30.5
Weight ±3% (kg)	1.05