# MODEL : FT60

RATIO : 10.15.20.25.30.40.50 ( 雙段 2-Stage)



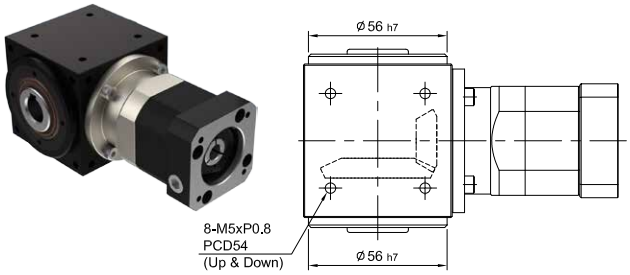


## FT-RO

搭配行星減速機 - 出力中空軸

Fitted with Planetary Reducer

- Hollow Output Shaft

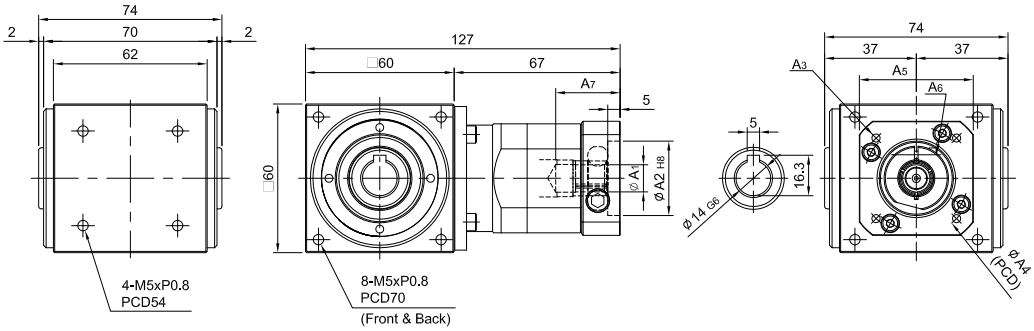


unit:mm

| Model / Code | 60 |
|---|---|
| A1 | 8、11 |
| A2 | 30、40、50 |
| A3 | M3、M4、M5 |
| A4 | 46、60、63 |
| A5 | 46、55 |
| A6 | M4 x P0.7 |
| A7 | 26、30.5 |
| Weight ±3% (kg) | 1.4 |

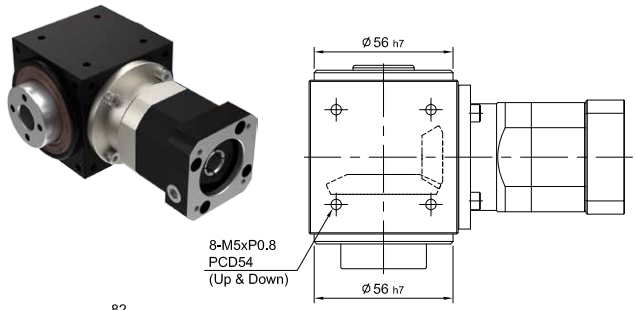


## FT-RP

搭配行星減速機 - 出力盤式

Fitted with Planetary Reducer

- Fixing Flange

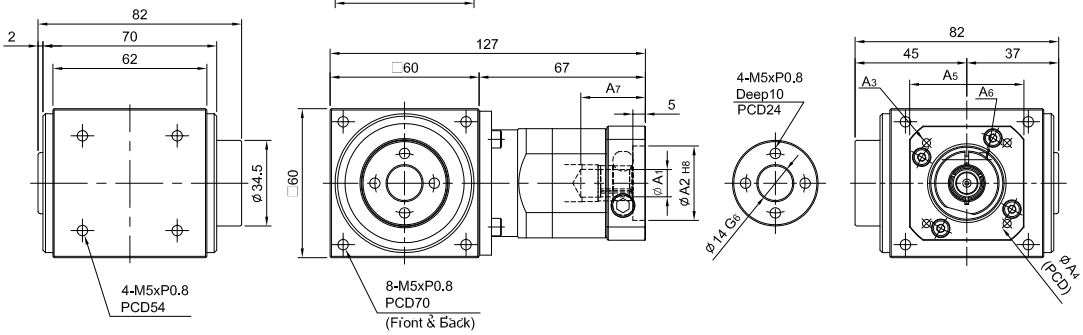


unit:mm

| Model / Code | 60 |
|---|---|
| A1 | 8、11 |
| A2 | 30、40、50 |
| A3 | M3、M4、M5 |
| A4 | 46、60、63 |
| A5 | 46、55 |
| A6 | M4 x P0.7 |
| A7 | 26、30.5 |
| Weight ±3% (kg) | |

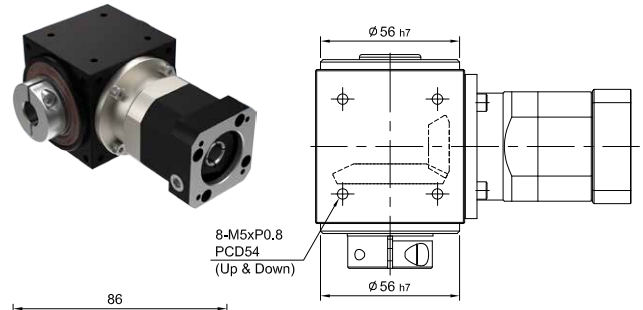


## FT-RC

搭配行星減速機 - 出力迫緊環

Fitted with Planetary Reducer

- Set Collar

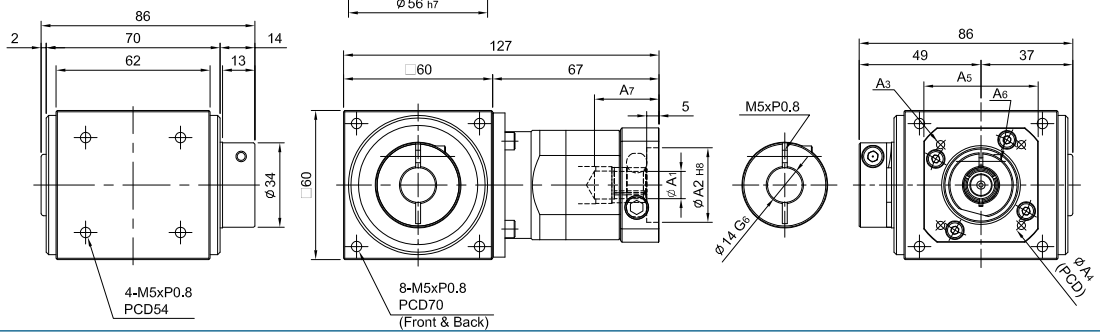


unit:mm

| Model / Code | 60 |
|---|---|
| A1 | 8、11 |
| A2 | 30、40、50 |
| A3 | M3、M4、M5 |
| A4 | 46、60、63 |
| A5 | 46、55 |
| A6 | M4 x P0.7 |
| A7 | 26、30.5 |
| Weight ±3% (kg) | |